Illustrated Parts Manual

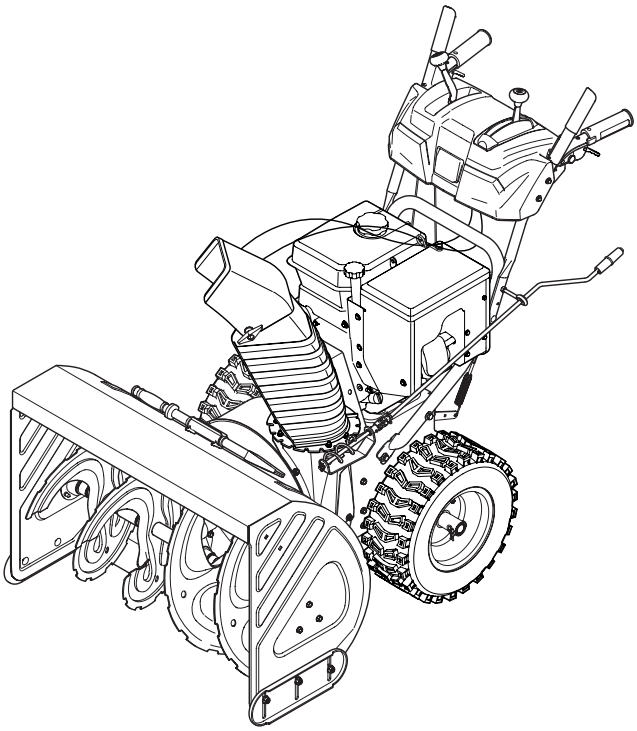

Two Stage Snow Thrower — Polar Blast 3310XP

TROY-BILT LLC, P.O. BOX 361131 CLEVELAND, OHIO 44136-0019

Printed In USA

Form No. 769-07124
(June 06, 2011)

To The Owner

Thank You

Thank you for purchasing an MTD Snow Thrower. It was carefully engineered to provide excellent performance when properly operated and maintained.

All information in this manual is relative to the most recent product information available at the time of printing. Please be aware that this Illustrated Part's Manual may cover a range of product specifications for various models.

Components listed and/or illustrated in this manual may not be applicable to all models. We reserve the right to change product specifications, designs and equipment without notice and without incurring obligation.

Throughout this manual, all references to *right* (RH) and *left* (LH) are observed from the operating position.

Table of Contents

Augers, Auger Housing & Gearbox..... 4
Engine Model 483-SUA 12
Handles, Handle Panel & Discharge Chute..... 6
Label Map 10
Snow Thrower Drive System..... 8

Record Product Information

To ease in ordering replacement parts, please locate the model plate on the equipment and record the information in the provided area to the right. You can locate the model plate by standing at the operator's position and looking down at the rear of the deck.

Model Number

Serial Number

Painted Parts

When ordering painted service parts, a four digit color suffix must be added to the part number (e.g. 783-XXXXX-0637). Please refer to the table below for current color codes:

0637	Black
0709	Dark Green (Bolens, Yard-Man)
0662	Oyster Gray (MTD Gold)
0638	Red (Yard Machines, Huskee, Troy-Bilt, MTD)
0691	Black Jack (MTD Gold, MasterCut)

0674	Yellow (Yard-Man)
0650	Metallic Red (White Outdoor)
0629	Silver Flake (MTD Platinum)
04038	Day Orange (Daedong)
04033	Flint Mica (Troy-Bilt XP)

This page left intentionally blank.

Augers, Auger Housing, and Gearbox

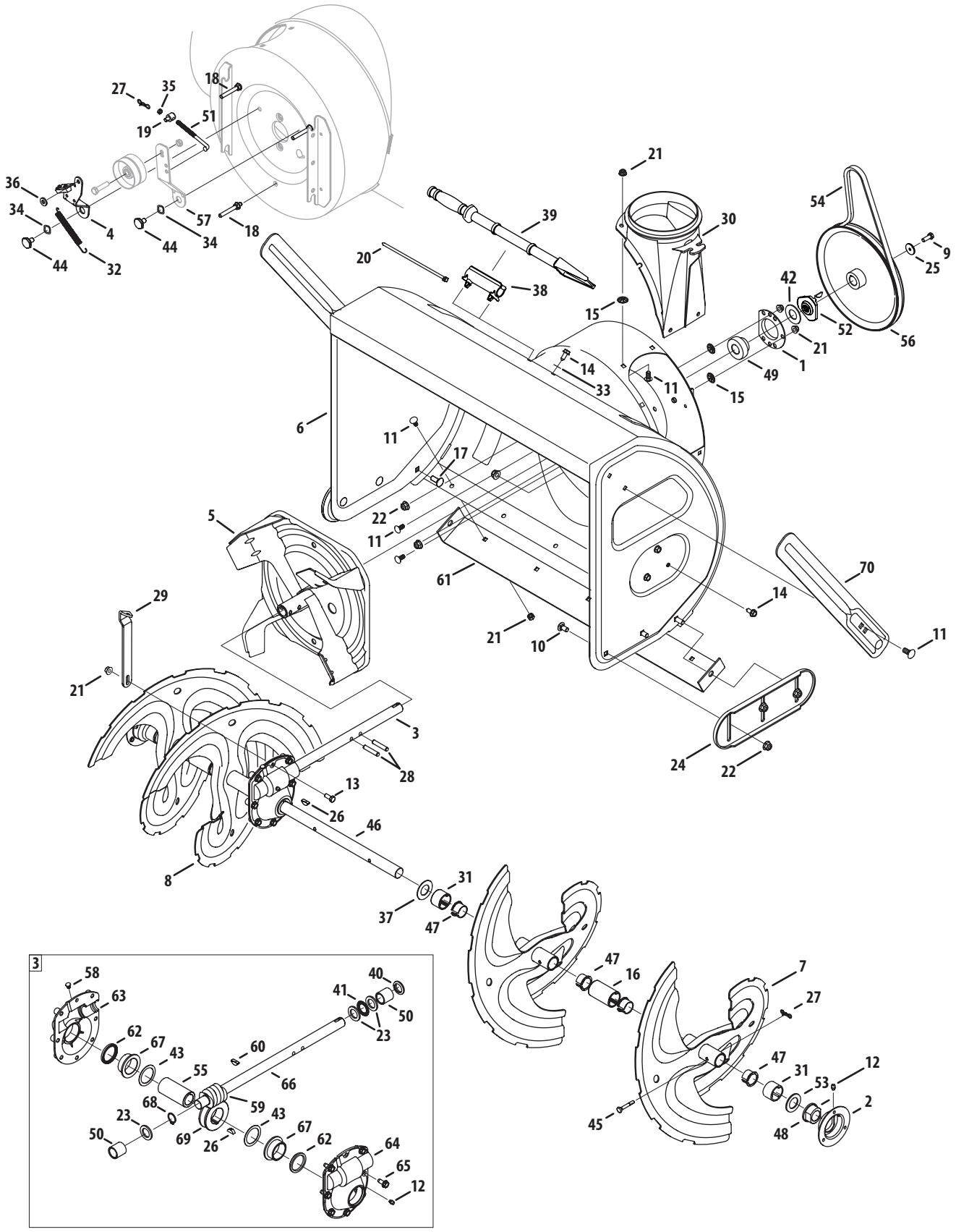

Ref.	Part No.	Description
1	05244B	Housing, Bearing
2	784-0315A	Housing, Bearing
3	918-04514	Gear Box Assembly
4	918-0281A	Bracket Assembly, Auger Brake
5	684-0090B	Impeller, 16"
6	684-04226	Housing, Auger
7	684-04151	Spiral Assembly, LH
8	684-04152	Spiral Assembly, RH
9	710-1245B	Screw, Hex Cap Lock, 5/16-24
10	710-0389	Screw, Carriage, 3/8-16 x .75
11	710-0451	Screw, Carriage, 5/16-18 x .75
12	937-3000	Fitting, Lube
13	710-0376	Screw, Hex Cap, 5/16-18 x 1.0 Gr5
14	710-04484	Screw, 5/16-18 x .750
15	926-04012	Nut, Push
16	731-05162	Spacer, 1.0 x 1.5 x 2.5 Lg
17	710-3168	Screw, Carriage, 3/8-16 x 1.00
18	710-04606A	Screw w/Stud, 5/16-18 x .4300
19	911-0677	Ferrule
20	725-0157	Tie Strap
21	712-04063	Nut, Hex Flange Lock, 5/16-18
22	712-04065	Nut, Hex Flange Lock, 3/8-16
23	936-0291	Wash, Flat, .88 ID x .38 OD
24	784-5697	Skid Shoe
25	736-0505	Washer, Flat, .34 x 1.5 x .15 Ht.
26	914-0135	Key, Woodruff, 1/4 x 3/4
27	714-04040	Pin, Bow-tie Cotter
28	915-0118	Pin, Spiral, 5/16 x 1.75
29	790-00264A	Bracket, Gear Box Support
30	731-1696B	Adapter, Chute, 6"
31	731-05163	Spacer, 1.0 x 1.5 x 1.0 Lg
32	732-0858	Spring, Extension
33	936-0159	Washer, Flat, .349 x .879 .063
34	736-0174	Washer, Wave, .625 x .885 x .015
35	712-3007	Jam Nut, 5/16-18

Ref.	Part No.	Description
36	936-3008	Washer, .344 x .75 x .12
37	736-3046A	Washer, 1.01 x 1.86 x .06
38	731-2635	Clip, Mounting
39	931-2643	Tool, Clean-out
40	921-0145	Seal, Oil
41	741-0184	Bearing, Thrust
42	736-0188	Washer, Flat, .76 x 1.49 x .06
43	936-0266	Wash, Flat, 1.52ID x 2.0 OD
44	938-0281	Screw, Shoulder, .625 x .17
45	738-04155	Pin, Shear, .25 x 1.75
46	938-04158	Shaft, Spiral
47	741-0494	Bushing, Flange,
48	741-0192	Bearing, Flange w/Flats
49	941-04024	Bearing, Self Aligning
50	941-0217	Sleeve
51	747-0980A	Rod, Auger Idler
52	748-04067A	Adapter, Pulley w/Pins
53	950-04020	Spacer, 1.004 x 1.375 x .25
54	954-04194A	V-Belt, 1/2 x 42
55	738-0275	Shaft, Gear, Worm
56	756-04244A	Pulley, Auger Drive, 10.0
57	784-0385D	Bracket, Auger Idler
58	721-0325	Plug
59	917-0299	Gear, Worm
60	914-0126	Key, Hi Pro, 3/16 x 3/4
61	784-5714B	Plate, Shave
62	921-0146	Oil Seal
63	918-0246	Hsg, Ass'y, Auger RH (Incl. Ref. 62 & 67)
64	918-0435	Hsg, Ass'y, Auger LH (Incl. Ref. 62 & 67)
65	710-1260A	Screw, LD, 5/16-18 x .750
66	711-04714	Shaft, Drive, Auger
67	741-0670	Flange Bearing
68	716-0111	External, Retaining, Ring
69	917-1425	Gear, Worm, LH
70	790-00181	Blade Guide

Handles, Handle Panel & Discharge Chute

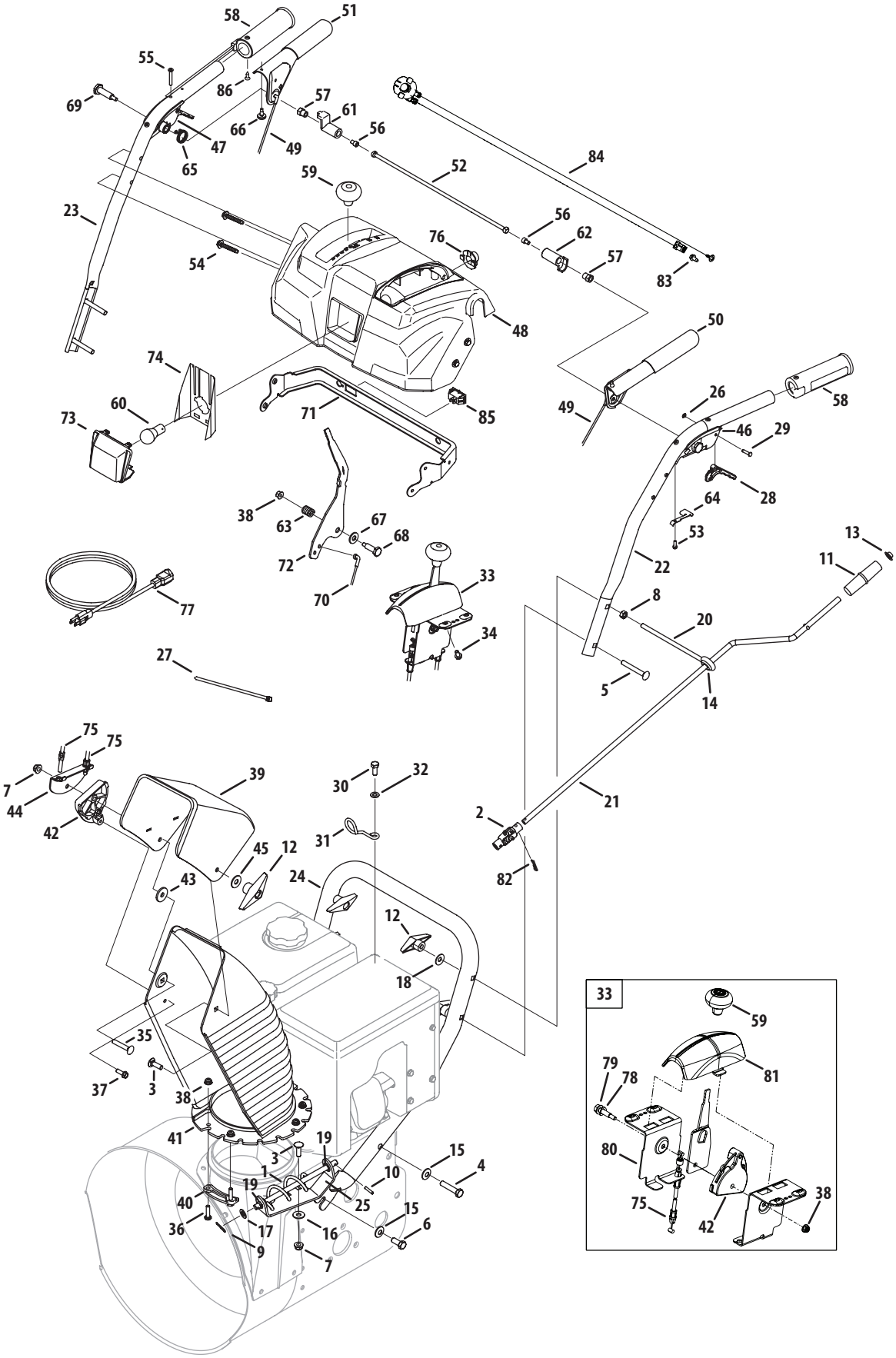

Ref.	Part Number	Description
1	684-04308A	Chute Crank Assembly
2	684-04350	Joint Block Assembly
3	710-0276	Screw, Carriage, 5/16-18 x 1.0
4	710-04682	Screw, Hex, 3/8-16 x 2.00 Lock
5	710-0572	Screw, Carriage, 5/16-18 x 2.5
6	710-3118	Screw, Hex, 3/8-16 x 1.0 Lock, Gr5
7	712-04063	Flange Lock Nut, 5/16-18
8	912-3010	Hex Nut, 5/16-18
9	914-0104	Internal Cotter Pin
10	715-04095	Spring Pin
11	720-0201A	Knob, Crank
12	920-0284	Wing Knob
13	926-0100	Cap, Push, 3/8
14	735-0234	Grommet, Rubber
15	736-0105	Washer, Bel, .375 x .87 x .063
16	936-0159	Washer, Flat, .349 x .879 .063
17	936-0185	Washer, .375 x .738 x .063
18	736-0242	Washer, Belleville, .34 x .872 x .06
19	941-0475	Plastic Bushing, .380 I.D.
20	747-04747	Eye Bolt
21	747-04925A	Chute Rod
22	749-04675	Handle, Upper - LH
23	749-04674	Handle, Upper - RH
24	749-0991	Handle, Lower
25	790-00329	Chute Crank Bracket
26	716-04036	Ring, Retainer
27	725-0157	Cable Tie
28	731-06113	Trigger
29	738-04126	Pin, 3/16
30	710-04022	Hex Head Screw, MB 1.25
31	732-04677	Cable Guide
32	936-0264	Flat Washer, .330 x .630 x .0635
33	984-04230	2-Way Chute Control™ Assy
34	710-04187	Hi-Lo Screw, 1/4-15 x 0.5
35	710-0458	Bolt, Carriage, 5/16-18 x 1.75
36	710-0597	Screw, 1/4-20 x 1.00
37	710-0895	Hi-Lo Screw, 1/4-15 x .75
38	712-04064	Flange Lock Nut, 1/4-20
39	731-0846C	Upper Chute
40	731-0851A	Chute, Flange Keeper
41	731-0903E	Lower Chute
42	731-1313C	Chute Tilt Cable Guide
43	936-0231	Flat Washer

Ref.	Part Number	Description
44	784-5594	Cable Bracket
45	936-0159	Washer, Flat, .349 x .879
46	631-04133A	Handle Clutch Lock - LH
47	631-04134B	Handle Clutch Lock - RH
48	931-05332A	Handle Panel
49	646-0012	Cable Assembly, Auger/Drive
50	684-04111B	Handle Engage Assy - LH
51	684-04112B	Handle Engage Assy - RH
52	684-04250	Rod Ass'y, Clutch Lock Pivot
53	710-04326	Screw, #8-16 x 0.50
54	710-04586	Screw, 1/4-20 x 1.625
55	710-1233	Screw, #10-24 x 0.375
56	710-3069	Screw, 1/4-20 x.375
57	712-04081A	Shoulder Nut, 1/4-20
58	725-05149	Heated Grip
59	720-04039	Shift Knob
60	725-1629	Lamp
61	731-04894D	Lock Plate
62	731-04896B	Clutch Lock Cam
63	732-0193	Compression Spring
64	732-04219C	Clutch Lock Spring
65	732-04238	Torsion Spring
66	935-0199A	Rubber Bumper
67	936-0267	Flat Washer, .385 x .87 x .06
68	738-04125	Shoulder Screw
69	738-04348	Shoulder Screw, 1/4-20 x 1.345
70	746-04341	Speed Selector Cable
71	790-00248C	Panel Bracket
72	790-00281B	Shift Lever
73	731-05319	Lens Panel
74	777X41805	Reflector Label
75	746-04338	Cable, Chute Tilt
76	925-1649	Light Socket
77	929-0071A	Extension Cord, 110V
78	736-0413	Washer, Spring, .39 x .625 x .012
79	738-04185	Screw, Shoulder, .31 x .995:1/4-20
80	790-00200	Bracket, Mounting
81	731-05307	Cover, Tilt Cover
82	914-0101	Internal Cotter Pin
83	710-0599	1/4-20 x .50
84	725-05148	Wire Harness
85	725-04393	Heated Grip Switch
86	710-0837	Screw, #10-16 x .625

Snow Thrower Drive System

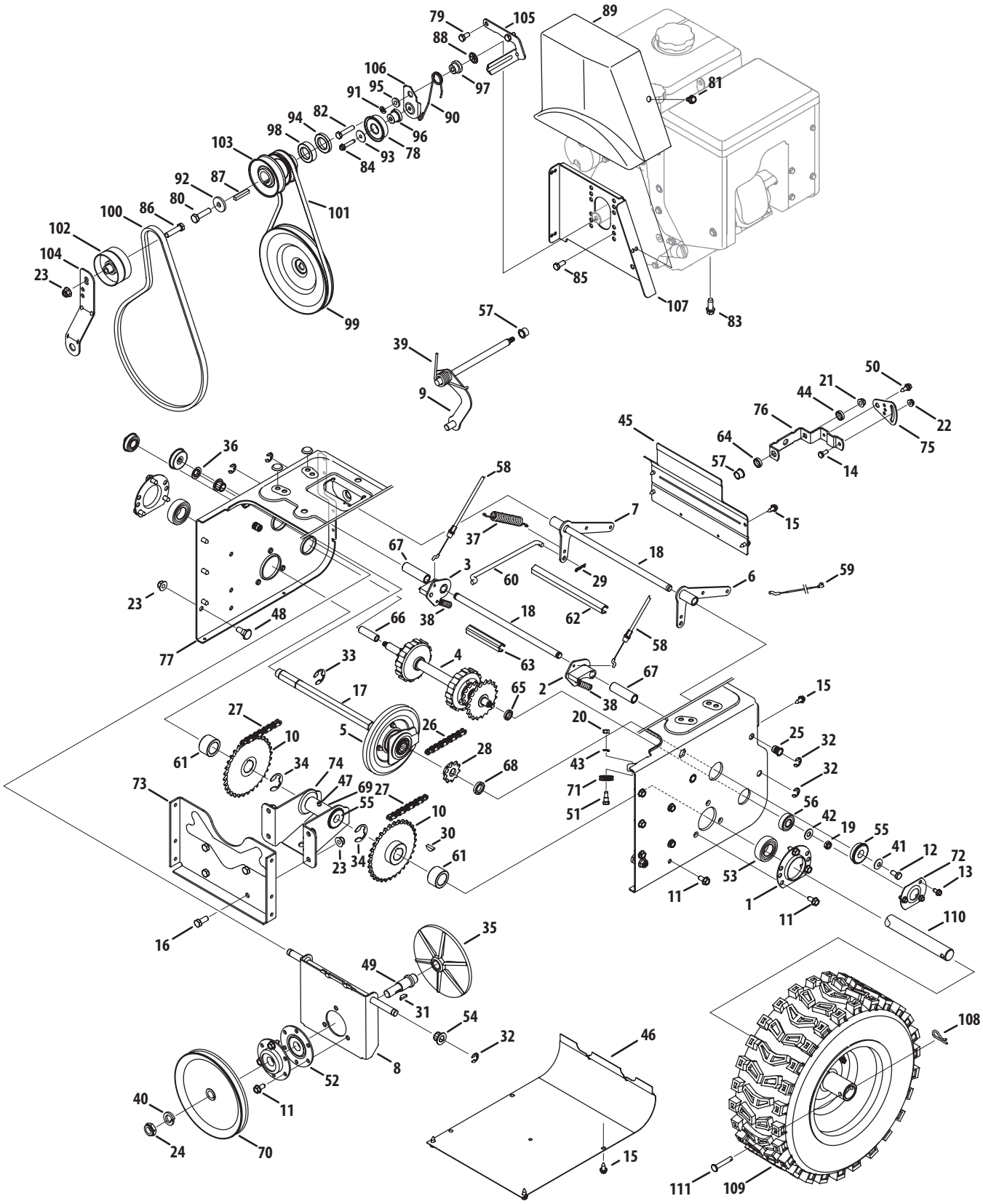

Ref.	Part Number	Description
1	05244B	Housing, Bearing
2	618-0279P	Dogg, Steering Drive, LH
3	618-0280P	Dogg, Steering Drive, RH
4	918-0282E	Shaft Assembly, Steering
5	918-04178	Assembly, Friction Wheel
	718-04034	Wheel, Friction, Bonded
	710-0896	Screw, Hex Wash
6	684-0118B	Bracket, Auger Actuator
7	684-0119B	Bracket, Drive Actuator
8	684-04212	Brkt, Friction Drive Suprt.
9	684-04229	Rod Assembly, Shift
10	684-04235	Sprocket, 32T
11	710-04484	TT Screw, 5/16-18 x .750
12	710-0538	Screw, Hex Cap Lock,
13	710-0599	Screw, Self-tapping, 1/4-20, 0.500
14	710-0751	Hex Head Screw, 1/4-20
15	710-1652	Screw, Hex Wash.
16	710-3001	Screw, Hex Cap, 3/8-16
17	911-04279	Shaft, Hex Drive
18	711-04605	Shaft, Actuator
19	912-0116	Nut, Hex Insert Jam Lock
20	912-0138	Nut, Hex, 1/4-28 GR5
21	712-04063	Flange Lock Nut, 5/16-18
22	712-04064	Flange Lock Nut, 1/4-20
23	712-04065	Flange Lock Nut, 3/8-16
24	912-0413	Hex Nut, 5/8-18
25	712-0717	Nut, Insert 3/8-16
26	713-0284	Chain, Endless, #41 x 36L
27	713-0286	Chain, #420 x 40L
28	913-04015	Sprocket, #41 x 10T
29	914-0104	Pin, Internal Cotter
30	914-0135	Key, Woodruff
31	914-0388	Key, Hi-Pro, 3/16 x 5/8
32	916-0104	E-Ring
33	716-0136	Ring, Retaining
34	716-04048	Ring, Retainer
35	917-0302	Plate, Drive
36	726-0221	Speed Nut, .500
37	932-0121	Spring, Extension
38	932-0209	Spring, Extension
39	732-04385	Torsion Spring, .750 I.D. x .968 Lg.
40	936-0158	Washer, Lock, 5/8
41	736-0242	Wsh, Bell., .34 x .872 x .06
42	936-0864	Wash, .375 x .812 x .060
43	936-0329	Washer, Lock, 1/4
44	936-3015	Flat Washer, .469 x .875 x .105
45	790-00257	Cover, Upper Frame
46	790-00259	Cover, Lower Frame
47	937-3000	Fitting, Lube, 3/16 Drive
48	738-0143	Screw, Shldr., .498 x .34
49	738-0279	Spindle, Drive Plate
50	738-04184A	Shoulder Screw, .368 x .113
51	738-0924A	Screw, Hex Shldr., 1/4-28
52	741-0163A	Ass'y, Bearing/Housing
53	941-04025	Bearing, Self Aligning
54	741-04108	Bearing, Hex Flange
55	941-0563	Bearing, Ball
56	741-0747	Bush, Flg, .5625 x 1.375 x .4375
57	741-0748	Bush, Flg, .5 ID x .627 OD

Ref.	Part Number	Description
58	746-04337A	Steering Cable, 35.97" Long
59	946-0951A	Cable, Auger Idler
60	747-0973	Rod, Drive Clutch
61	750-04703	Spacer, 1.0 ID x 1.50 OD
62	750-04717	Spacer, .51 ID x 7.895 Lg.
63	750-04718	Spacer, .51 ID x 3.66 Lg.
64	750-04719	Spacer, .5151 ID x .750 OD x .220
65	750-05342	Spacer, .566 ID x .87 OD x .190
66	750-05343	Spacer, .566 ID x .87 OD x 1.25
67	750-0903B	Spacer, .514 x .632 x 2.44
68	950-0997	Spacer, .675 x 1.0 x .23
69	750-1302B	Spacer, .6725 x 1.125 x 2.48
70	756-0344	Pulley, Auger
71	756-0625	Roller, Cable
72	784-0404	Bearing Retaining Bracket
73	784-0406A	Bracket, Frame Support
74	784-0407	Bracket, Axle Support
75	790-00217A	Speed Selector Pivot Bracket
76	790-00218A	Speed Selector Shift Bracket
77	790-00349	Transmission Frame
78	684-04169	Idler Pulley Assembly
79	710-0627	Screw, Hex Cap, 5/16-24
80	710-0191	Hex Hd. Screw, 3/8-24 x 1.25 GR8
81	710-0607	Screw, Hx Wash Hd Tapp
82	710-0624	Screw, Hex Cap, 5/16-24 x 1.50
83	710-0654A	Screw, 3/8-16 x 1.00
84	710-0809	Screw, 1/4-20 x 1.25
85	738-04439	Screw, Shldr., .500 x .145
86	710-0347	Hex Head Screw, 3/8-16 x 1.75
87	914-0105	Square Key, 3/16 x 1.00
88	926-04012	Nut, Push
89	931-2531	Cover, Belt
90	732-04308A	Torsion Spring, .850 dia. x .333 lg.
91	936-0119	Washer, Lock, 5/16
92	736-0247	Washer, Flat, .406 x 1.25
93	736-3092	Washer, Flat, .265 x 1.0 x .030
94	750-05316	Spacer, 1.155 ID x 1.50 OD x .15
95	748-04112B	Shoulder Spcr., .3175 x .500 x.094
96	750-04571	Shoulder Spacer, .260 x .785 x .538
97	750-04821	Shoulder Spacer, .340 x 1.00
98	750-05318	Spacer, 1.004 ID x 1.625 OD x .35
99	756-0344	Pulley, Drive
100	954-04194A	V-Belt, 4L x 44.60 Lg.
101	954-04202	V Belt, 3/8 x 36.68
102	756-04224	Pulley, Flat Idler, 2.75 OD
103	756-04351	Double Pulley, 3.25 x 2.75
104	784-0385D	Bracket, Auger Idler
105	790-00167A	Belt Keeper Bracket
106	790-00208C	Idler Drive Wheel Bracket
107	790-00254A	Belt Cover Bracket
108	914-0149B	Pin, Internal Cotter
109	634-0225A-0911	Wheel Ass'y. - LH
	634-0226A-0911	Wheel Ass'y. - RH
	734-2031	Tire
	934-0255	Valve
	741-0246A	Bearing
110.	711-04607A	Axle, Wheel, 33"
111.	711-04615	Pin, Clevis

Label Map

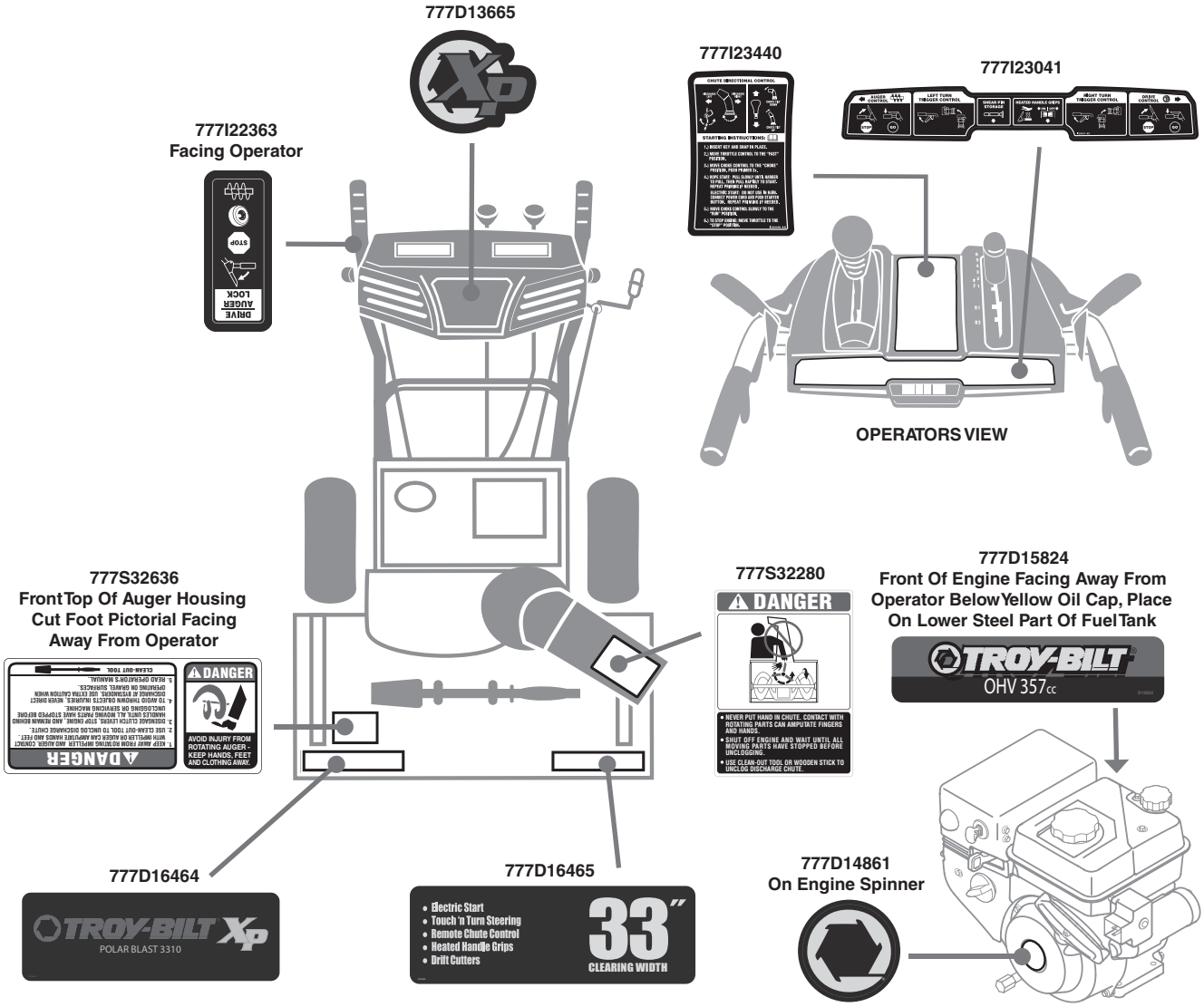
777D13665
777I23440
777I23041
777I22363
Facing Operator
STOP
DRIVE
AUGER
LOCK
OPERATORS VIEW
777S32636
Front Top Of Auger Housing
Cut Foot Pictorial Facing
Away From Operator
DANGER
AVOID INJURY FROM ROTATING AUGER - KEEP HANDS, FEET AND CLOTHING AWAY.
777S32280
DANGER
NEVER PUT HAND IN CHUTE. CONTACT WITH ROTATING PARTS CAN AMPUTATE FINGERS AND HANDS.
SHUT OFF ENGINE AND WAIT UNTIL ALL MOVING PARTS HAVE STOPPED BEFORE UNCLOGGING.
USE CLEAN-OUT TOOL OR WOODEN STICK TO UNCLOG DISCHARGE CHUTE.
777D15824
Front Of Engine Facing Away From
Operator Below Yellow Oil Cap, Place
On Lower Steel Part Of Fuel Tank
TROY-BILT
OHV 357cc
777D16464
TROY-BILT XP
POLAR BLAST 3310
777D16465
Electric Start
Touch 'n Turn Steering
Remote Chute Control
Heated Handle Grips
Drift Cutters
33"
CLEARING WIDTH
777D14861
On Engine Spinner

483-SUA Muffler & Controls

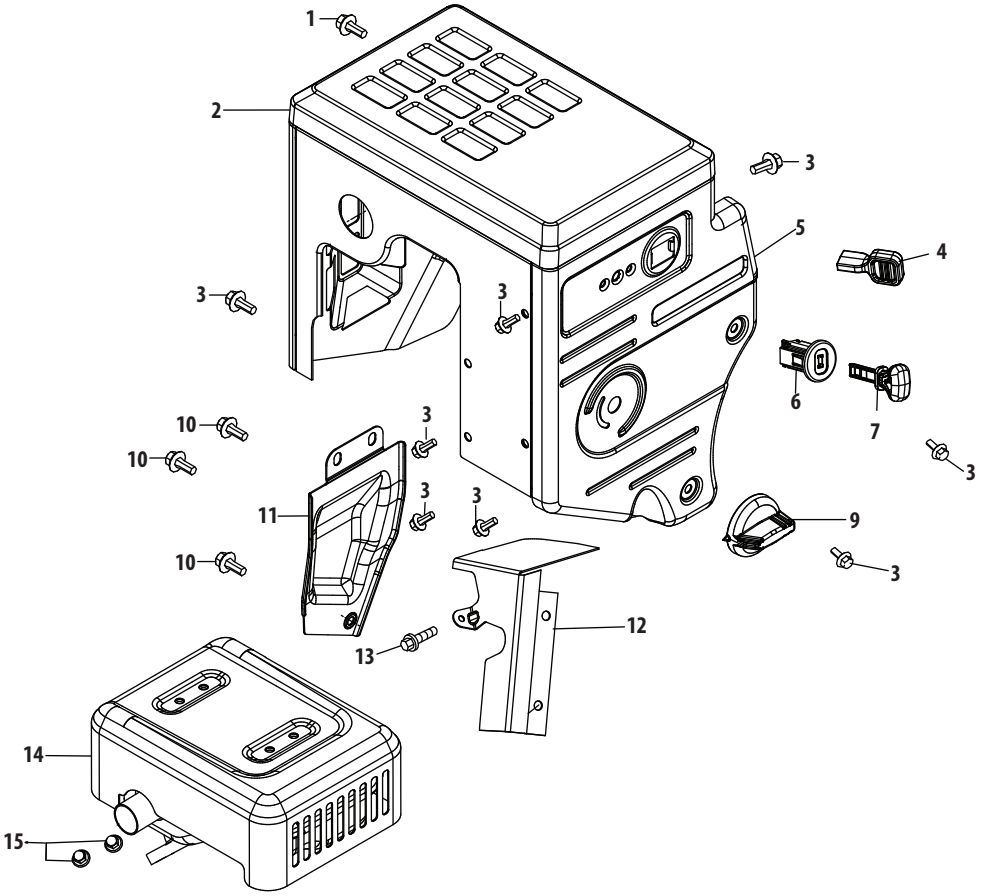

Ref.	Part Number	Description
1	710-04968	Bolt,M6×14
2	951-11339	Muffler Shield
3	710-04915	Bolt M6×12
4	951-10757	Throttle Control Knob
5	951-11595	Control Panel
6	951-10637	Key Switch Base
7	731-05632	Key
9	951-11302	Choke Knob
10	710-04914	Bolt M6×10
11	951-11181	Exhaust Pipe Shield
12	951-11321	Carb Isolator Bracket
13	710-04968	Bolt M6×16
14	951-11338	Muffler Assembly
15	712-04219	Nut M8

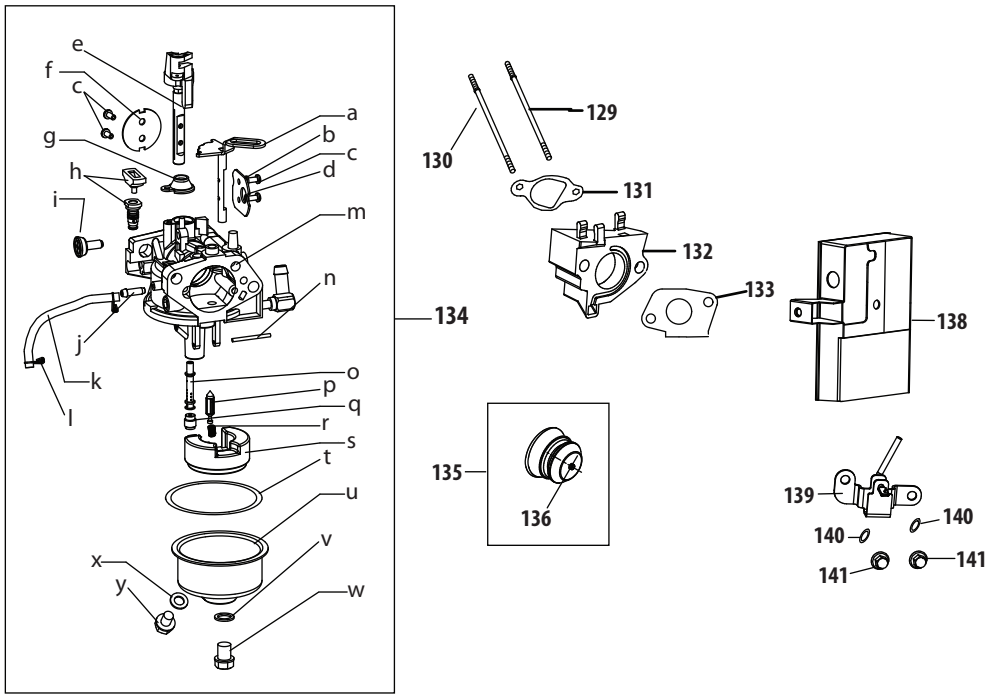

Ref.	Part Number	Description
129	710-05392	Stud M6-8×100 Carburetor
130	710-05056	Stud M6-8×118 Carburetor
131	951-11315	Carburetor Insulator Gasket
132	951-11316	Carburetor Insulator
133	951-11223	Carburetor Gasket
134	951-11303A	Carburetor Assembly
135	951-10639A	Primer Assembly
136	951-11824	Primer
138	951-11304	Heater Box
139	951-11192	Choke Control
140	736-04477	Lock Washer
141	712-04212	Nut M6
a	n/a	Choke Shaft
b	n/a	Lock Washer
c	n/a	Screw M3×5
d	n/a	Choke Plate
e	n/a	Throttle Shaft
f	n/a	Throttle Plate
g	n/a	Lock Plate
h	n/a	Idle Jet Assembly

Ref.	Part Number	Description
i	n/a	Idle Speed Adjusting Screw
j	n/a	Mixture Screw
k	751-11991	Primer Hose
l	951-11906	Hose Clamp
m	n/a	Carburetor Body
n	n/a	Float Pin
o	n/a	Emulsion Tube
p	n/a	Needle Valve
q	n/a	Main Jet
r	n/a	Needle Valve Spring
s	n/a	Float
t	951-11970	Fuel Bowl Gasket
u	n/a	Fuel Bowl
v	951-11348	Fuel Bowl Gasket
w	710-04945	Fuel Bowl Mounting Bolt
x	951-11349	Fuel Drain Plug Gasket
y	710-04938	Fuel Drain Plug
	951-11332A	Carburetor Kit - Major
		(Incl.g,h,n,o,p,q,r,w,t,v,x)

483-SUA Crankcase

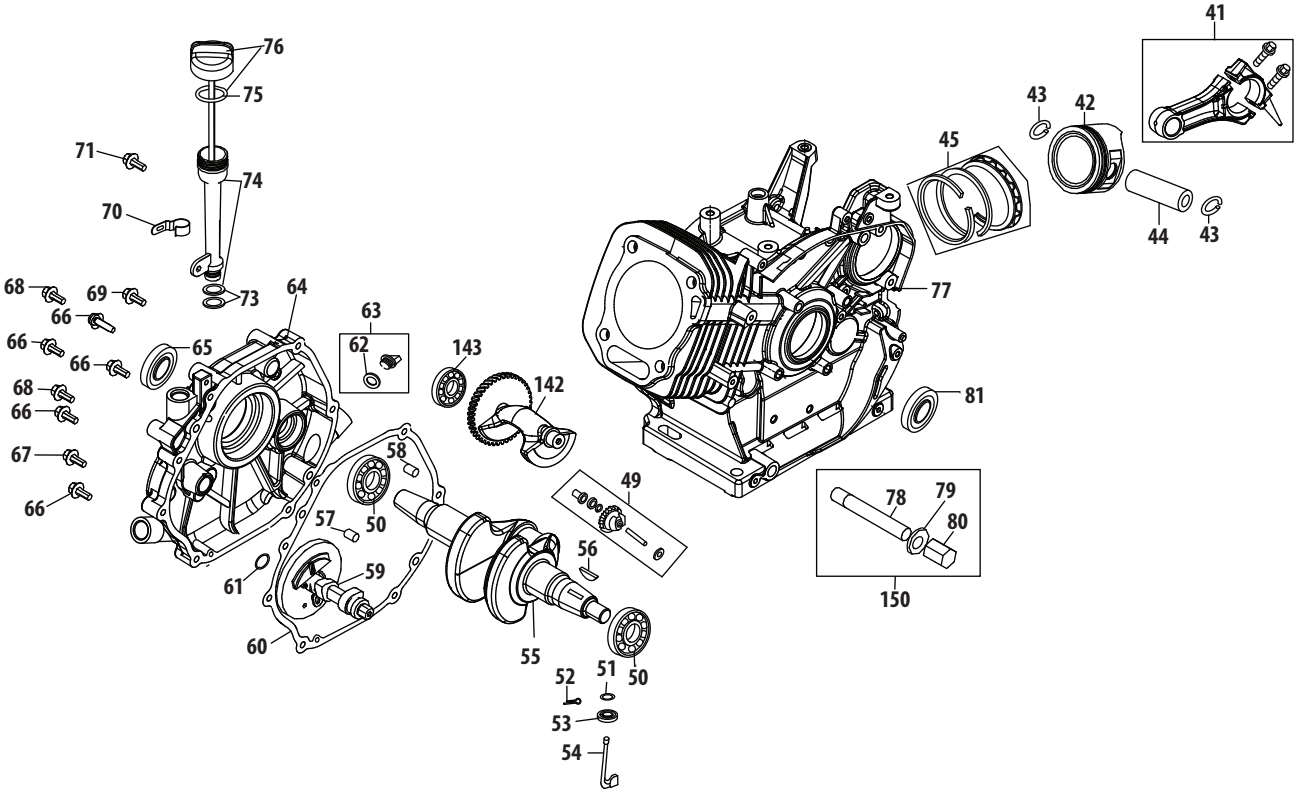

Ref.	Part Number	Description
41	951-11951	Connecting Rod Assembly
42	951-11952	Piston
43	951-11953	Piston Pin Snap Ring
44	951-11954	Piston Pin
45	951-12579	Piston Ring Set
49	951-11956	Governor Gear/Shaft Assembly
50	951-11373	Radial Ball Bearing 6202-P6
51	736-04453	Washer 8×20×0.8
52	714-04077	Cotter Pin
53	951-11958	Governor Seal
54	951-11365	Governor Arm Shaft
55	951-11342	Crankshaft Kit
		(Incl.50,55,56,65,81)
56	951-10307	Woodruff Key
57	715-04102	Dowel Pin 9×12
58	715-04092	Dowel Pin 7×14
59	951-11959	Camshaft Assy.
60	951-11376	Crankcase Cover Gasket
61	736-04476	Washer 16×24×0.5
62	951-11960	O-Ring 16×3
63	951-11345	Oil Filler Plug Assembly
64	951-11340	Crankcase Cover Kit
		(Incl.50,60,61,64-68)
65	951-11375	Oil Seal 30×46×8
66	710-04971	Bolt M8×38
67	710-04972	Bolt M8×45
68	710-05052	Bolt M8×35

Ref.	Part Number	Description
69	710-04968	Bolt M6×16
70	951-11320	Dipstick Clamp
71	710-05349	Bolt M6×8
73	951-11381	Oil Fill Tube O-Ring
74	951-11972	Oil Fill Tube Assembly
75	951-11904	Dipstick O-Ring
76	951-11971A	Dipstick Assembly
77	951-11341A	Crankcase Kit
		(Incl.50,53,77,81)
78	951-11350	Oil Drain Pipe Assy.
79	736-04440	Washer 10×16×1.5
80	710-04906	Oil Drain Plug
81	951-11499	Oil Seal 35×52×7
142	951-11968	Balanceable Shaft Assy.
143	951-11969	Bearing 6207-P6
150	951-10641	Oil Drain Assembly
	952Z483-SUA	Complete Engine
	951-11331	Gasket Kit - External
		(Incl.79,108,125,131-133)
	951-11330A	Gasket Kit - Complete
		(Incl.53,60,65,79,81,106,
		108,125,131-133)
	951-11328B	Short Block Assembly
		(Incl.41-45,49-61,63-68,77-79,
		81,102,105,106,108,110,125,
		131,132,142,143)

483-SUA Fuel Tank & Mounting

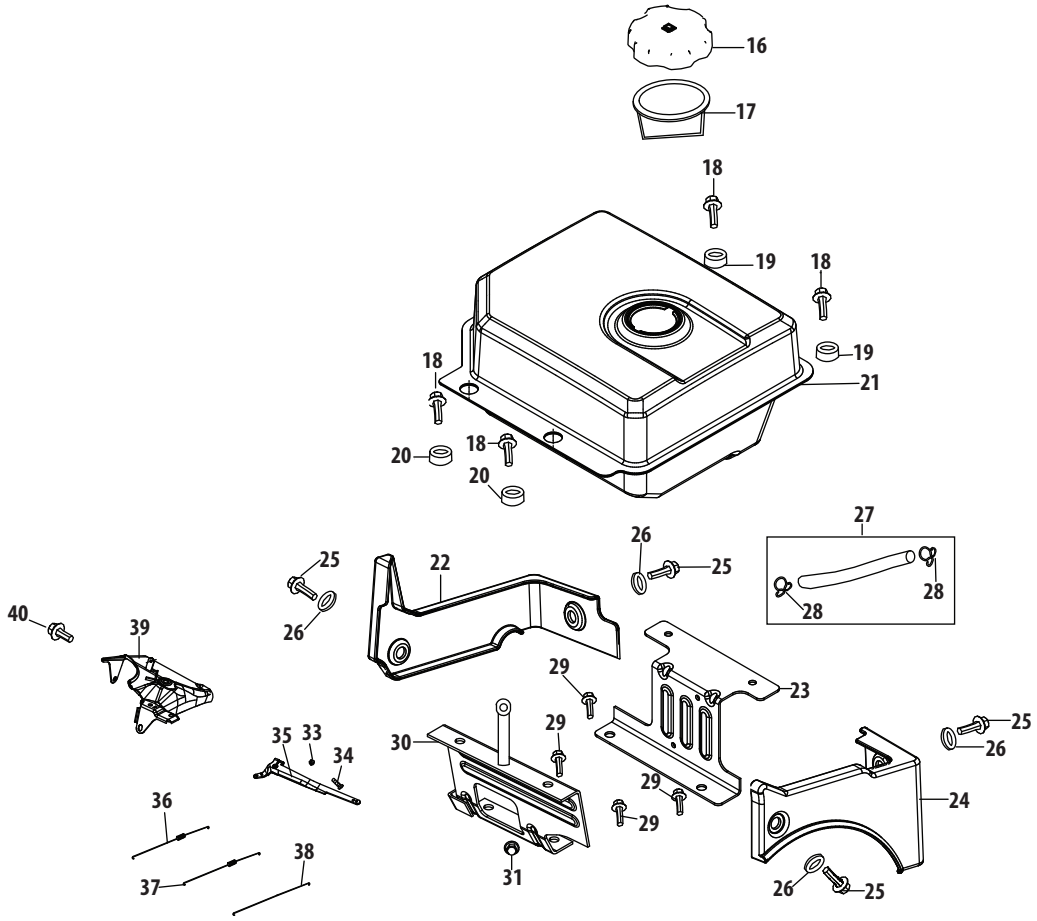

Ref.	Part Number	Description
16	951-12532	Fuel Cap Assembly
17	951-11933	Fuel Level Indicator
18	710-04970	Bolt M8×20
19	750-05312	Bush Gas Tank
20	750-05313	Bush Gas Tank
21	951-11201	Fuel Tank Assembly
22	951-11319	Left Trim Plate
23	951-11318	Rear Mainting Bracket Assy.
24	951-11351	Right Trim Plate
25	710-04968	Bolt M6×16
26	736-04452	Bush
27	951-11336	Fuel Hose Kit
28	951-11700	Fuel Hose Clamp

Ref.	Part Number	Description
29	710-04921	Bolt M8×14
30	951-11182	Gas Tank Support Bracket
31	712-04219	Nut M8
33	712-04212	Nut M6
34	710-04908	Governor Arm Bolt
35	951-11307	Governor Arm
36	951-11306	Governor Spring
37	951-11203	Throttle Linkage Spring
38	951-11309	Throttle Linkage
39	951-11311	Primer Bracket
40	710-04916	Bolt M6×14
N/S	951-10651	Fuel Tank Nipple

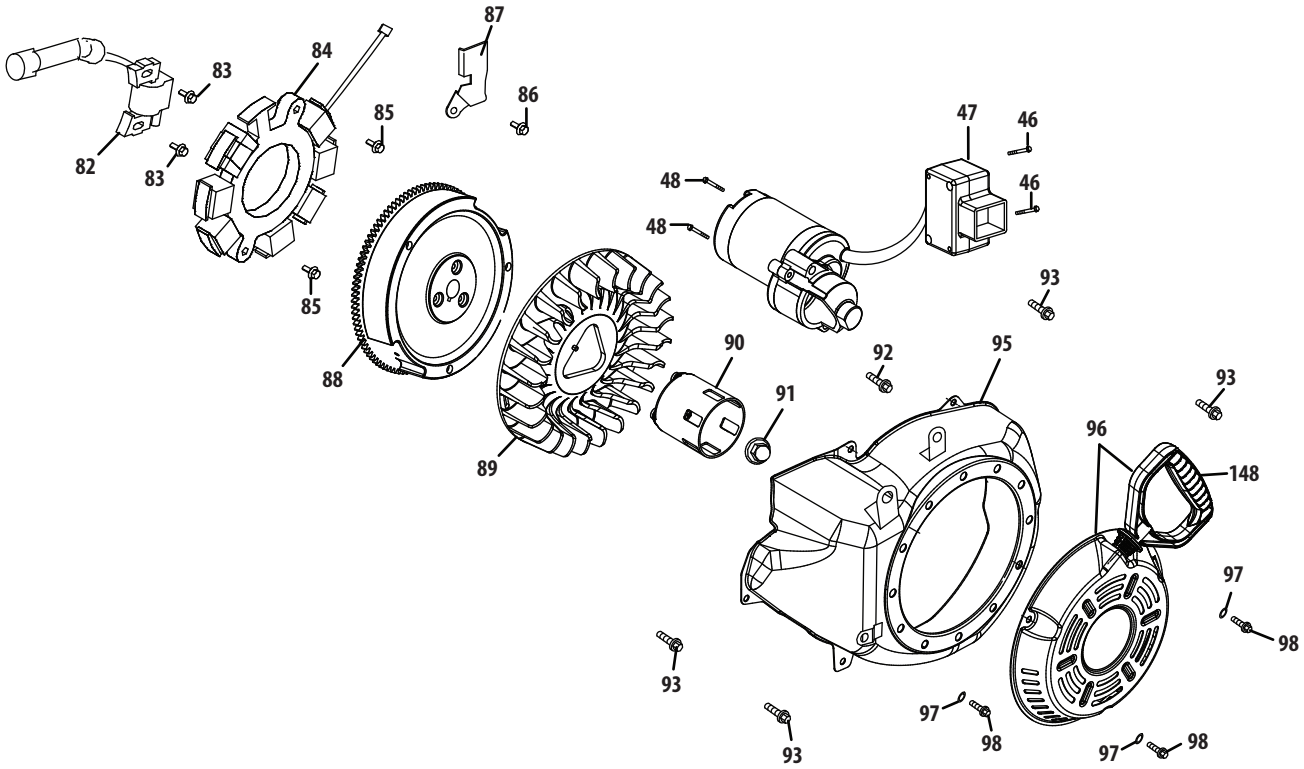

Ref.	Part Number	Description
46	710-04965	Bolt M4×55
47	951-11196	Startup Electromotor
48	710-04967	Bolt M8×55
82	951-11305	Ignition Coil Assembly
83	710-05350	Ignition Coil Bolt
84	951-11961	Coil Assy.Charge
85	710-04969	Bolt M6×30
86	710-04966	Bolt M6×8
87	951-11186	Alt Wire Clamp Brkt
88	951-11312	Flywheel

Ref.	Part Number	Description
89	951-11313	Fan Cooling
90	951-11314	Pulley Starter
91	712-04220	Nut Special M16×1.5
92	710-04968	Bolt M6×16
93	710-04915	Bolt M6×12
95	951-11211	Blower Housing
96	951-11310	Recoil Starter
97	736-04455	Gasket 6
98	710-04974	Bolt M6×10
148	731-05696	Starter Handle

483-SUA Cylinder Head

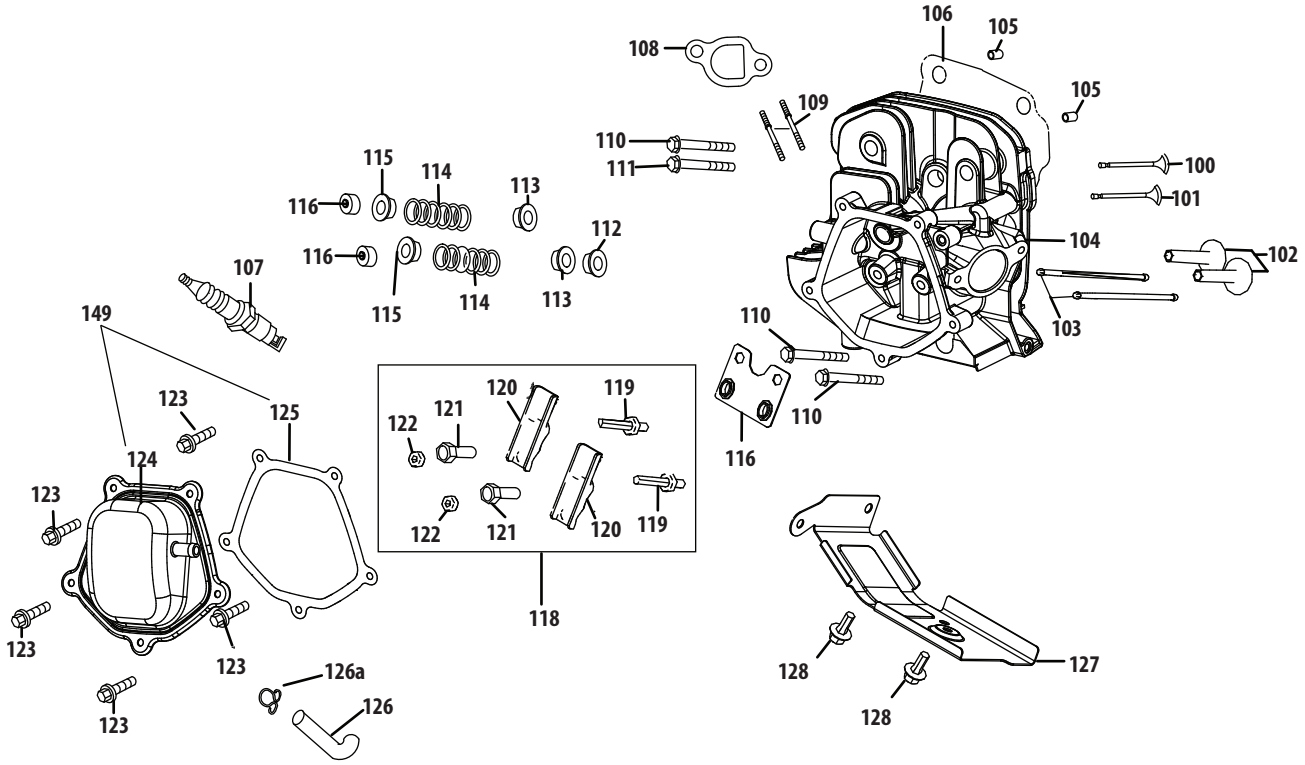

Ref.	Part Number	Description
100	951-11337	Valve Kit
101	951-11337	Valve Kit
102	951-11962	Tappet
103	951-11335	Push Rod
104	951-12555	Cylinder Head Kit
		(Incl.106,110-112,125)
105	715-04097	Dowel Pin 12×20
106	951-11963	Gasket Cylinder Head
107	951-10292	Spark Plug/F6Rtc
108	951-11212	Exhaust Pipe Gasket
109	710-04964	Stud M8×48.5
109	951-11207	Muffler Stud Assembly
110	710-05053	Bolt M10×1.25×87
111	710-05390	Bolt M10×1.25×65
112	951-11964	Intake Valve Seal
113	951-12077	Valve Spring Retainer
114	951-12078	Valve Spring
115	951-12080	Retainer Ex.Valve Spring
116	951-12081	Adjuster Exh Valve
117	951-11965	Push Rod Guide
118	951-11981	Rocker Arm Assembly
119	710-04962	Bolt Pivot

Ref.	Part Number	Description
120	951-11966	Rocker Arm
121	751-11123	Adjusting Nut ,Valve
122	751-11124	Nut Pivot Locking
123	710-05054	Valve Cover Bolt
125	951-11967	Valve Cover Gasket
124	951-11220	Valve Cover
126	951-11221	Breather Hose
126a	726-04101	Breather Hose Clamp
127	951-11317	Air Shield
128	710-04915	Bolt M6×12
149	951-11333	Valve Cover Kit
	952Z483-SUA	Complete Engine
	951-11331	Gasket Kit - External
		(Incl.79,108,125,131-133)
	951-11330A	Gasket Kit - Complete
		(Incl.53,60,65,79,81,106,
		108,125,131-133)
	951-11329B	Cylinder Head Assembly
		(Incl.100,101,104,106,108-110,
		112,114-117,119-122,125,
		129,130-132)

483-SUA Label Map

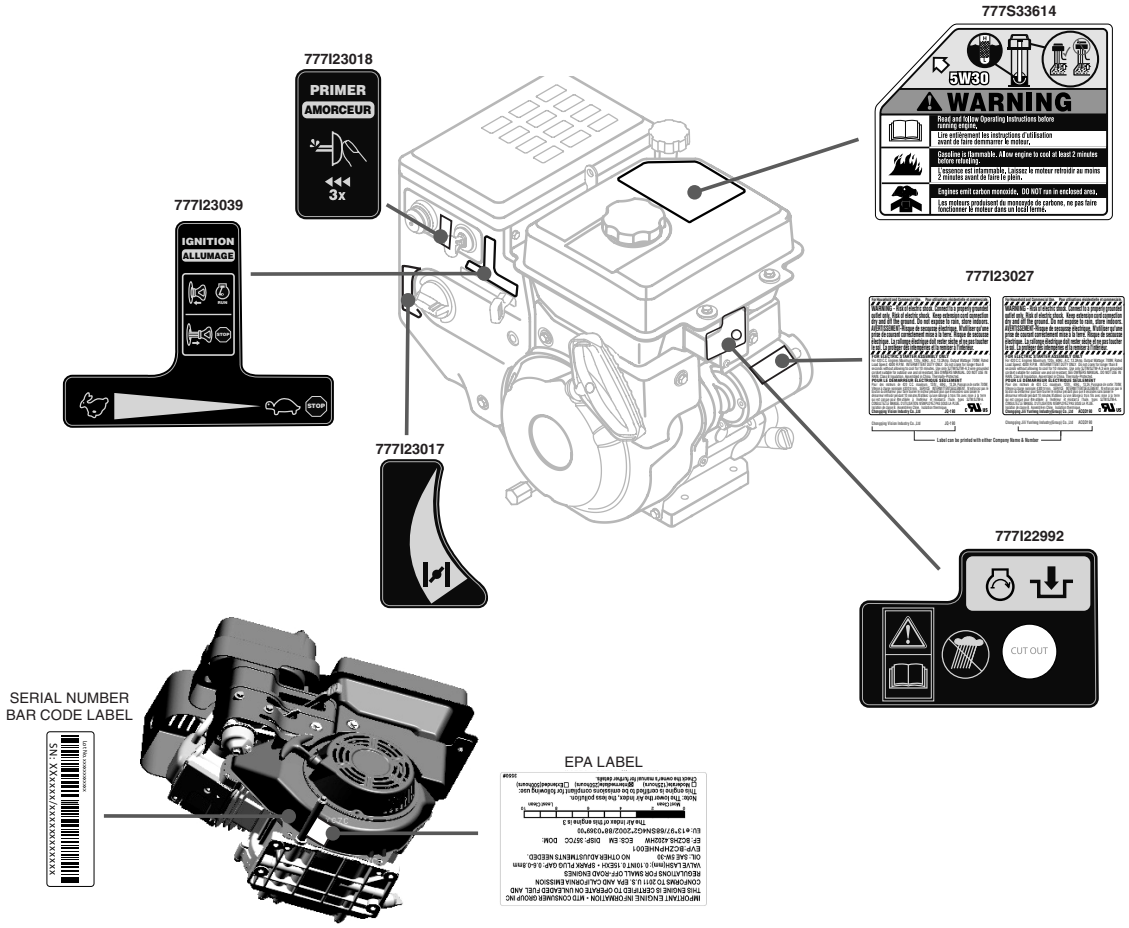

Notes

To order replacement parts or locate your nearest service dealer call Customer Support at (800) 828-5500.
or visit www.troybilt.com to find the nearest authorized dealer in your area.

TROY-BILT LLC, P.O. BOX 361131 CLEVELAND, OHIO 44136-0019